2015 IRC 2018 CT Amendment

PRIVATE OUTDOOR SWIMMING POOL INFORMATION PACKAGE

WHAT INFORMATION IS NEEDED IN ORDER TO OBTAIN A POOL PERMIT

The information in this handout is to help guide you in the permitting requirements for pools and addresses the common questions asked.

What information do I need for a permit?

- You will need to provide a plot plan showing the following;
  - House and all other structures on the property
  - Location of your septic system and well
  - Location of any wetlands on your property
  - Proposed location of your pool with dimensions from the property lines, house, septic and wetlands.
- The Building Official will need construction documents for the pool and a wiring diagram. The plans need to show enough information so that anyone can build it the same way.

How far away from my septic system do I have to be?

- Above ground pools must be a minimum of 10'-0" from any part of the septic system
- In-ground pools must be a minimum of 25'-0" from any part of the septic system

How far away from my well do I have to be?

- In-ground pools shall be 25'-0" from the well because they typically have drains.
- Above ground pools we try to keep 10'-0" for practical matters and the filter on the opposite side of the pool

TYPICAL INSPECTIONS

- Underground utilities
  - Inspection verifies the burial depth, number of bends and the type of wiring method used.
- Temporary enclosure for in-ground pools
- Rough electrical
- Pool rebar
- Bonding
- Final

APPENDIX G
SWIMMING POOLS, SPAS AND HOT TUBS

SECTION AG101
GENERAL

AG101.1 General. The provisions of this appendix shall control the design and construction of swimming pools, spas and hot tubs installed in or on the lot of a one- and two-family dwelling.

AG101.2 Pools in flood hazard areas. Pools that are located in flood hazard areas established by Table R301.2(1), including above-ground pools, on-ground pools and in-ground pools that involve placement of fill, shall comply with Sections AG101.2.1 or AG 101.2.2.

Exception: Pools located in riverine flood hazard areas which are outside of designated floodways.

AG101.2.1 Pools located in designated floodways. Where pools are located in designated floodways, documentation shall be submitted to the building official, which demonstrates that the construction of the pool will not increase the design flood elevation at any point within the jurisdiction.

AG101.2.2 Pools located where floodways have not been designated. Where pools are located where design flood elevations are specified but floodways have not been designated, the applicant shall provide a floodway analysis that demonstrates that the proposed pool will not increase the design flood elevation more than 1 foot at any point within the jurisdiction.

SECTION AG102
DEFINITIONS

AG102.1 General. For the purposes of these requirements, the terms used shall be defined as follows and as set forth in Chapter 2.

ABOVE-GROUND/ON-GROUND POOL. See "Swimming pool"

BARRIER. A fence, wall, building wall or combination thereof which completely surrounds the swimming pool and obstructs access to the swimming pool.

HOT TUB. See "Swimming pool."

IN-GROUND POOL. See "Swimming pool."

[CT Amd] RESIDENTIAL. That which is situated on the premises of a detached one- or two-family dwelling or a one-family townhouse not more than three stories in height where the pool is intended to be used by the owners and invited guests.

SPA, NONPORTABLE. See "Swimming pool."

SPA, PORTABLE. A nonpermanent structure intended for recreational bathing, in which all controls, water-heating and water-circulating equipment are an integral part of the product.

SWIMMING POOL. Any structure intended for swimming or recreational bathing that contains water over 24 inches (610 mm) deep. This includes in-ground, above-ground and on-ground swimming pools, hot tubs and spas.

SWIMMING POOL, INDOOR. A swimming pool which is totally contained within a structure and surrounded on all four sides by walls of said structure.

SWIMMING POOL, OUTDOOR. Any swimming pool which is not an indoor pool.

[CT Amd] R105.2 Work exempt from permit. Prefabricated swimming pools that are equal to or less than 24 inches (610 mm) deep.

SECTION AG103
SWIMMING POOLS

AG103.1 In-ground pools. In-ground pools shall be designed and constructed in conformance with ANSI/NSPI-5 as listed in Section AG108.

AG103.2 Above-ground and on-ground pools. Above-ground and on-ground pools shall be designed and constructed in conformance with ANSI/NSPI-4 as listed in Section AG108.

AG103.3 Pools in flood hazard areas. In flood hazard areas established by Table R301.2(1), pools in coastal high hazard areas shall be designed and constructed in conformance with ASCE 24.

SECTION AG104
SPAS AND HOT TUBS

AG104.1 Permanently installed spas and hot tubs. Permanently installed spas and hot tubs shall be designed and constructed in conformance with ANSI/NSPI-3 as listed in Section AG108.

AG104.2 Portable spas and hot tubs. Portable spas and hot tubs shall be designed and constructed in conformance with ANSI/NSPI-6 as listed in Section AG108.

SECTION AG105
BARRIER REQUIREMENTS

AG105.1 Application. The provisions of this chapter shall control the design of barriers for residential swimming pools, spas and hot tubs. These design controls are intended to provide protection against potential drownings and near drownings by restricting access to swimming pools, spas and hot tubs.

AG105.2 Outdoor swimming pool. An outdoor swimming pool, including an in-ground, above-ground or on-ground pool, hot tub or spa shall be surrounded by a barrier which shall comply with the following:

1. The top of the barrier shall be at least 48 inches above grade measured on the side of the barrier which faces away from the swimming pool. The maximum vertical clearance between grade and the bottom of the barrier shall be 2 inches measured on the side of the barrier which faces away from the swimming pool. Where the top of the pool structure is above grade, such as an above-ground pool, the barrier may be at ground level, such as the pool structure, or mounted on top of the pool structure. Where the barrier is mounted on top of the pool structure, the maximum vertical clearance between the top of the pool structure and the bottom of the barrier shall be 4 inches.

2. Openings in the barrier shall not allow passage of a 4-inch-diameter sphere.

3. Solid barriers which do not have openings, such as a masonry or stone walls, shall not contain indentations or protrusions except for normal construction tolerances and tooled masonry joints.

4. Where the barrier is composed of horizontal and vertical members and the distance between the tops of the horizontal members is less than 45 inches, the horizontal members shall be located on the swimming pool side of the fence. Spacing between vertical members shall not exceed 1 3/4 inches in width. Where there are decorative cutouts within vertical members, spacing within the cutouts shall not exceed 1 3/4 inches in width.

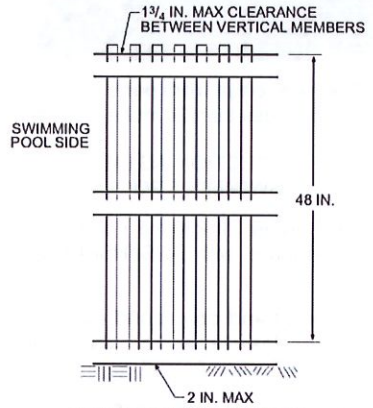

HORIZONTAL MEMBERS SPACED LESS THAN 45 IN.

5. Where the barrier is composed of horizontal and vertical members and the distance between the tops of the horizontal members is 45 inches or more, spacing between vertical members shall not exceed 4 inches. Where there are decorative cutouts within vertical members, spacing within the cutouts shall not exceed 1 3/4 inches in width.

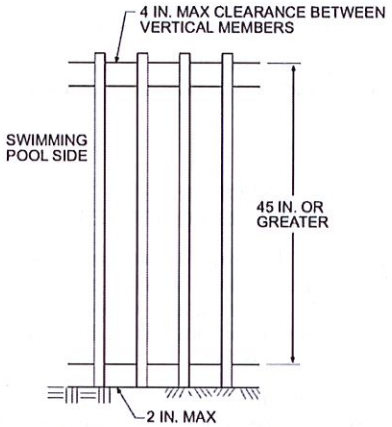

HORIZONTAL MEMBERS SPACED 45 IN. OR GREATER

6. Maximum mesh size for chain link fences shall be a 2 ¼ inch square unless the fence has slats fastened at the top or the bottom which reduce the openings to not more than 1 ¾ inches.

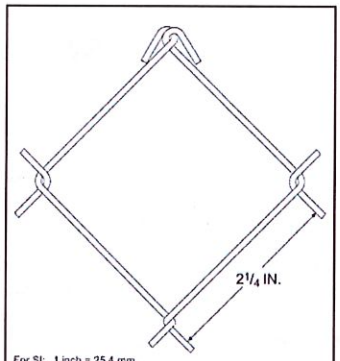

For SI: 1 inch = 25.4 mm.

Figure AG105.2(3)
CHAIN-LINK FENCE MESH FOR PRIVATE SWIMMING POOLS

7. Where the barrier is composed of diagonal members, such as a lattice fence, the maximum opening formed by the diagonal members shall not be more than 1 3/4 inches.

8. Access gates shall comply with the requirements of Section AG105.2, Items 1 through 7, and shall be equipped to accommodate a locking device. Pedestrian access gates shall open outward away from the pool and shall be self-closing and have a self-latching device. Gates other than pedestrian access gates shall have a self-latching device. Where the release mechanism of the self-latching device is located less than 54 inches from the bottom of the gate, the release mechanism and openings shall comply with the following:

   8.1 The release mechanism shall be located on the pool side of the gate at least 3 inches below the top of the gate, and

   8.2 The gate and barrier shall have no opening larger than 1/2 inch within 18 inches of the release mechanism.

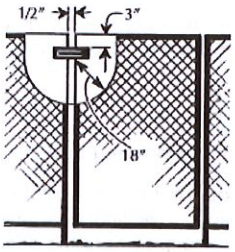

9. Where a wall of a dwelling serves as part of the barrier, one of the following conditions shall be met:

   9.1. The pool shall be equipped with a power safety cover in compliance with ASTM F1346; or

   9.2. Doors with direct access to the pool through that wall shall be equipped with an alarm which produces an audible warning when the door and/or its screen, if present, are opened. The alarm shall be listed and labeled in accordance with UL 2017. The deactivation switch(es) shall be located at least 54 inches above the threshold of the door; or

   9.3. Other means of protection, such as self-closing doors with self-latching devices, which are approved by the governing body, shall be acceptable as long as the degree of protection afforded is not less than the protection afforded by Item 9.1 or 9.2 described above.

10. [CT Amd] Where an above-ground or on-ground pool structure is used as a barrier or where the barrier is mounted on top of the pool structure, and the means of access is a ladder or steps, the ladder or steps shall be surrounded by a barrier that meets the requirements of section AG105.2, items 1 to 9, inclusive.

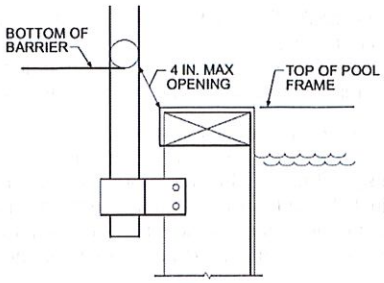

Figure AG105.2(1)
OPENING LIMITATIONS

AG105.3 Indoor swimming pool. Walls surrounding an indoor swimming pool shall comply with Section AG105.2, Item 9.

AG105.4 Prohibited locations. Barriers shall be located to prohibit permanent structures, equipment or similar objects from being used to climb them.

AG105.5 Barrier exceptions. Spas or hot tubs with a safety cover which complies with ASTM F 1346, as listed in Section AG107, shall be exempt from the provisions of this appendix.

[CT Amd] AG105.6 Temporary enclosure. A temporary enclosure shall be installed prior to the electrical bonding inspection of any in-ground swimming pool unless the permanent barrier specified in Section AG105.2 is in place prior to the commencement of the installation. The temporary enclosure shall be a minimum of 4 feet (1219 mm) in height, shall have no openings that will allow passage of a 4-inch sphere and shall be equipped with a positive latching device on any openings.

[CT Amd] AG105.7 Pool alarm. Pursuant to section 29-265a of the Connecticut General Statutes, no building permit shall be issued for the construction or substantial alteration of a swimming pool at a residence occupied by, or being built for, one or more families unless a pool alarm is installed with the swimming pool. As used in this section, "pool alarm" means a device that emits a sound of at least 50 decibels when a person or an object weighing 15 pounds or more enters the water in a swimming pool.

Exception: Hot tubs and portable spas shall be exempt from this requirement.

SECTION AG106
ENTRAPMENT PROTECTION FOR SWIMMING POOL AND SPA SUCTION OUTLETS

AG106.1 General. Suction outlets shall be designed and installed in accordance with ANSI/APSP-7.

CHAPTER 11
ENERGY EFFICIENCY

SECTION N1103
SYSTEMS

N1103.9 (R403.9) Pools and inground permanently installed spas (Mandatory). Pools and inground permanently installed spas shall comply with Section N1103.9.1 through N1103.9.3.

N1103.9.1 (R403.9.1) Heaters. All heaters shall be equipped with a readily accessible on-off switch that is mounted outside of the heater to allow shutting off the heater without adjusting the thermostat setting. Gas-fired heaters shall not be equipped with constant burning pilot lights.

N1103.9.2 (R403.9.2) Time switches. Time switches or other control method that can automatically turn off and on heaters and pumps according to a preset schedule shall be installed on all heaters and pumps. Heaters, pumps and motors that have built in timers shall be deemed in compliance with this requirements.

Exceptions:

1. Where public health standards require 24-hour pump operation.
2. Where pumps are required to operate solar-and-waste-heat-recovery pool heating systems.

N1103.9.3 (R403.9.3) Covers. Heated pools and inground permanently installed spas shall be provided with a vapor-retardant cover.

Exception: Pools deriving over 70 percent of the energy for heating from site-recovered energy, such as a heat pump or solar energy source computed over an operating season.

[CT Amd] E3401.2.1 Alternative compliance. Compliance with the requirements of the 2014 NFPA 70 National Electrical Code portion of the State Building Code shall be deemed to be alternative compliance with the requirements of Chapters 34 through 43 of this code. At the time of permit application, the permit applicant shall state which code will be followed.

CHAPTER 42
SWIMMING POOLS

SECTION E4201
GENERAL

E4201.1 Scope. The provisions of this chapter shall apply to the construction and installation of electric wiring and equipment associated with all swimming pools, wading pools, decorative pools, fountains, hot tubs and spas, and hydromassage bathtubs, whether permanently installed or storable, and shall apply to metallic auxiliary equipment, such as pumps, filters and similar equipment. Sections E4202 through E4206 provide general rules for permanent pools, spas and hot tubs. Section E4207 provides specific rules for storable pools. Section E4208 provides specific rules for spas and hot tubs, Section E4209 provides specific rules for hydromassage bathtubs. [680.1]

E4201.2 Definitions. [680.2]

CORD-AND-PLUG-CONNECTED LIGHTING ASSEMBLY. A lighting assembly consisting of a cord-and-plug-connected transformer and a luminaire intended for installation in the wall of a spa, hot tub, or storable pool.

DRY·NICHE LUMINAIRE. A luminaire intended for installation in the floor or wall of a pool, spa or fountain in a niche that is sealed against the entry of pool water.

FORMING SHELL. A structure designed to support a wet-niche luminaire assembly and intended for mounting in a pool or fountain structure.

FOUNTAIN. Fountains, ornamental pools, display pools, and reflection pools. The definition does not include drinking fountains.

HYDROMASSAGE BATHTUB. A permanently installed bathtub equipped with a recirculating piping system, pump, and associated equipment. It is designed so it can accept, circulate and discharge water upon each use.

LOW VOLTAGE CONTACT LIMIT. A voltage not exceeding the following values:

1. 15 volts (RMS) for sinusoidal AC
2. 21.2 volts peak for nonsinusoidal AC
3. 30 volts for continuous DC
4. 12.4 volts peak for DC that is interrupted at a rate of 10 to 200 Hz.

MAXIMUM WATER LEVEL. The highest level that water can reach before it spills out.

NO-NICHE LUMINAIRE. A luminaire intended for installation above or below the water without a niche.

PACKAGED SPA OR HOT TUB EQUIPMENT ASSEMBLY. A factory-fabricated unit consisting of water-circulating, heating and control equipment mounted on a common base, intended to operate a spa or hot tub. Equipment may include pumps, air blowers, heaters, luminaires, controls and sanitizer generators.

PERMANENTLY INSTALLED SWIMMING, WADING, IMMERSION AND THERAPEUTIC POOLS. Those that are constructed in the ground or partially in the ground, and all others capable of holding water with a depth greater than 42 inches (1067 mm), and all pools installed inside of a building, regardless of water depth, whether or not served by electrical circuits of any nature.

POOL. Manufactured or field-constructed equipment designed to contain water on a permanent or semipermanent basis and used for swimming, wading, immersion, or therapeutic purposes.

POOL COVER, ELECTRICALLY OPERATED. Motor driven equipment designed to cover and uncover the water surface of a pool by means of a flexible sheet or rigid frame.

SELF-CONTAINED SPA OR HOT TUB. A factory-fabricated unit consisting of a spa or hot tub vessel with all water-circulating, heating and control equipment integral to the unit. Equipment may include pumps, air blowers, heaters, luminaires, controls and sanitizer generators.

SPA OR HOT TUB. A hydromassage pool, or tub for recreational or therapeutic use, not located in health care facilities, designed for immersion of users, and usually having a filter, heater, and motor-driven blower. They are installed indoors or outdoors, on the ground or supporting structure, or in the ground or supporting structure. Generally, a spa or hot tub is not designed or intended to have its contents drained or discharged after each use.

STORABLE SWIMMING OR WADING POOL. Those that are constructed on or above the ground and are capable of holding water with a maximum depth of 42 inches (1067 mm), or a pool with nonmetallic, molded polymeric walls or inflatable fabric walls regardless of dimension.

THROUGH-WALL LIGHTING ASSEMBLY. A lighting assembly intended for installation above grade, on or through the wall of a pool, consisting of two interconnected groups of components separated by the pool wall.

WET-NICHE LUMINAIRE. A luminaire intended for installation in a forming shell mounted in a pool or fountain structure where the luminaire will be completely surrounded by water.

SECTION E4202
WIRING METHODS FOR POOLS, SPAS, HOT TUBS AND HYDROMASSAGE BATHTUBS

E4202.1 General. Wiring methods used in conjunction with permanently installed swimming pools, spas, hot tubs or hydromassage bathtubs shall be installed in accordance with Table E4202.1 and Chapter 38 except as otherwise stated in this section. Storable swimming pools shall comply with Section E4207. [680.7; 680.21(A); 680.23(B); 680.23(F); 680.25(A); 680.40; 680.42; 680.43; 680.70]

E4202.2 Flexible cords. Flexible cords used in conjunction with a pool, spa, hot tub or hydromassage bathtub shall be installed in accordance with the following: [680.7(A); 680.7(B); 680.22(B)(5); 680.23(B)(3); 680.42; 680.43]

1. For other than underwater luminaires, fixed or stationary equipment shall be permitted to be connected with a flexible cord to facilitate removal or disconnection for maintenance or repair. For other than storable pools, the flexible cord shall not exceed 3 feet (914 mm) in length. Cords that supply swimming pool equipment, shall have a copper equipment grounding conductor not smaller than 12 AWG and shall terminate in a grounding-type attachment plug.

2. Other than listed low-voltage lighting systems not requiring grounding, wet-niche luminaires that are supplied by a flexible cord or cable shall have all exposed noncurrent-carrying metal parts grounded by an insulated copper equipment grounding conductor that is an integral part of the cord or cable. Such grounding conductor shall be connected to a grounding terminal in the supply junction box, transformer enclosure, or other enclosure and shall not be smaller than the supply conductors and not smaller than 16 AWG.

3. A listed packaged spa or hot tub installed outdoors that is GFCI protected shall be permitted to be cord and plug-connected provided that such cord does not exceed 15 feet (4572 mm) in length.

4. A listed packaged spa or hot tub rated at 20 amperes or less and installed indoors shall be permitted to be cord and plug-connected to facilitate maintenance and repair.

5. For other than underwater and storable pool lighting, luminaire, the requirements of Item 1 shall apply to any cord-equipped luminaire that is located within 16 feet (4877 mm) radially from any point on the water surface.

E4202.3 Double insulated pool pumps. A listed cord and plug-connected pool pump incorporating an approved system or double insulation that provides a means for grounding only the internal and nonaccessible, noncurrent-carrying metal parts of die pump shall be connected to any wiring method recognized in Chapter 38 that is suitable

for the location. Where the bonding grid is connected to the equipment grounding conductor of the motor circuit in accordance with Section E42042, Item 6.1, the branch circuit wiring shall comply with Sections E4202.1 and E4205.5. [680.21(B)]

TABLE E4202.1
ALLOWABLE APPLICATIONS FOR WIRING METHODS[a, b, c, d, e, f, g, h, l]

WIRING LOCATION OR PURPOSE (Application allowed where marked with an "A")	AC, FMC, NM, SR, SE	EMT	ENT	IMC[j], RMC[j], RNC[i]	LFMC	LFNMC	UF	MC[k]	FLEX CORD
Panelboard(s) that supply pool equipment: from service equipment to panelboard	A[b, e] SR not permitted	A[c]	A[b]	A	-	A	A[e]	A[e]	-
Wet-niche and no-niche luminaires: from branch circuit OCPD to deck or junction box	AC[b] only	A[c]	A[b]	A	-	A	-	A[b]	-
Wet-niche and no-niche luminaires: from deck or junction box to forming shell	-	-	-	A[d]	-	A	-	-	A[h]
Dry niche: from branch circuit OCPD to luminaires	AC[b] only	A[c]	A[b]	A	-	A	-	A[b]	-
Pool-associated motors: from branch circuit OCPD to motor	A[b]	A[c]	A[b]	A	A[f]	A[f]	A[b]	A	A[h]
Packaged or self-contained outdoor spas and hot tubs with underwater luminaire: from branch circuit OCPD to spa or hut tub	AC[b] only	A[c]	A[b]	A	A[g]	A[g]	-	A[b]	A[h]
Packaged or self-contained outdoor spas and hot tubs without underwater luminaires: from branch circuit OCPD to spa or hot tub	A[b]	A[c]	A[b]	A	A[g]	A[g]	A[b]	A	A[h]
Indoor spas and hot tubs, hydromassage bathtubs, or other pool, spa or hot tub associated equipment: from branch circuit OCPD to equipment	A[b]	A[c]	A[b]	A	A	A	A	A	A[h]
Connection at pool lighting transformers or power supplies	AC[b] only	A[c]	A[b]	A	A[m, g]	A[g]	-	A[b]	-

For SI: 1 foot = 304.8 mm.
a. For all wiring methods, see Section E4205 for equipment grounding conductor requirements.
b. Limited to use within buildings.
c. Limited to use on or within buildings.
d. Metal conduit shall be constructed of brass or other approved corrosion-resistant metal.
e. Permitted only for existing installations in accordance with exception to Section E4205.6.
f. Limited to where necessary to employ flexible connections at or adjacent to a pool motor.
g. Sections installed external to spa or hot tub enclosure limited to individual lengths not to exceed 6 feet. Length not limited inside spa or hot tub enclosure.
h. Flexible cord shall be installed in accordance with Section E4202.2.
i. Nonmetallic conduit shall be rigid polyvinyl chloride conduit Type PVC or reinforced thermosetting resin conduit Type RTRC.
j. Aluminum conduits shall not be permitted in the pool area where subject to corrosion.
k. Where installed as direct burial cable or in wet locations, Type MC cable shall be listed and identified for the location.
l. See Section E4202.3 for listed, double-insulated pool pump motors.
m. Limited to use in individual lengths not to exceed 6 feet. The total length of all individual runs of LFMC shall not exceed 10 feet.

SECTION E4203
EQUIPMENT LOCATION AND CLEARANCES

E4203.1 Receptacle outlets. Receptacles outlets shall be installed and located in accordance with Sections E4203.1.1 through E4203.1.5. Distances shall be measured as the shortest path that an appliance supply cord connected to the receptacle would follow without penetrating a floor, wall, ceiling, doorway with hinged or sliding door, window opening, or other effective permanent barrier. [680.22(A)(5)]

E4203.1.1 Location. Receptacles that provide power for water-pump motors or other loads directly related to the circulation and sanitation system shall be permitted to be located between 6 feet and 10 feet (1829 mm and 3048 mm) from the inside walls of pools and outdoor spas and hot tubs, and, where so located, shall be single and of the locking and grounding type and shall be protected by ground-fault circuit interrupters. [680.22(A)(1)]

Other receptacles on the property shall be located not less than 6 feet (1829 mm) from the inside walls of pools and outdoor spas and hot tubs.

E4203.1.2 Where required. At least one 125-volt, 15- or 20-ampere receptacle supplied by a general purpose branch circuit shall be located a minimum of 6 feet (1829 mm) from and not more than 20 feet (6096 mm) from the inside wall of pools and outdoor spas and hot rubs. This receptacle shall be located not more than 6 feet, 6 inches (1981 mm) above the floor, platform or grade level serving the pool, spa or hot tub. [680.22(A)(3)]

E4203.1.3 GFCI protection. All 15- and 20-ampere, single phase, 125-volt receptacles located within 20 feet (6096 mm) of the inside walls of pools and outdoor spas and hot tubs shall be protected by a ground-fault circuit-interrupter. Outlets supplying pool pump motors from branch circuits with short-circuit and ground-fault protection rated 15 or 20 amperes, 125 volt through 240 volt, single phase, whether by receptacle or direct connection, shall be provided with ground-fault circuit-interrupter protection for personnel. [680.22(C)]

E4203.1.4 Indoor locations. Receptacles shall be located not less than 6 feet (1829 mm) from the inside walls of indoor spas and hot tubs. A minimum of one 125-volt receptacle shall be located between 6 feet (1829 mm) and 10 feet (3048 mm) from the inside walls of indoor spas or hot tubs. [680.43(A) and (A)(1)]

E4203.1.5 Indoor GFCI protection. All 125-volt receptacles rated 30 amperes or less and located within 10 feet (3048 mm) of the inside walls of spas and hot tubs installed indoors, shall be protected by ground-fault circuit-interrupters. [680.43(A)(2)]

E4203.2 Switching devices. Switching devices shall be located not less than 5 feet (1524 mm) horizontally from the inside walls of pools, spas and hot tubs except where separated from the pool, spa or hot tub by a solid fence, wall, or other permanent barrier or the switches are listed for use within 5 feet (1524 min). Switching devices located in a room or area containing a hydromassage bathtub shall be located in accordance with the general requirements of this code. [680.22(D), 680.43(C), 680.72]

E4203.3 Disconnecting means. One or more means to simultaneously disconnect all ungrounded conductors for all utilization equipment, other than lighting, shall be provided. Each of such means shall be readily accessible and within sight from the equipment it serves and shall be located at least 5 feet (1524 mm) horizontally from the inside walls of a pool, spa, or hot tub unless separated from the open water by a permanently installed barrier that provides a 5 foot (1524 mm) or greater reach path. This horizontal distance shall be measured from the water`s edge along the shortest path required to reach the disconnect. [680.12]

E4203.4 Luminaires and ceiling fans. Lighting outlets, luminaires, and ceiling-suspended paddle fans shall be installed and located in accordance with Sections E4203.4.1 through E4203.4.5. [680.22(B)]

E4203.4.1 Outdoor location. In outdoor pool, outdoor spas and outdoor hot tubs areas, luminaires, lighting outlets, and ceiling-suspended paddle fans shall not be installed over the pool or over the area extending 5 feet (1524 mm) horizontally from the inside walls of a pool except where no part of the luminaire or ceiling-suspended paddle fan is less than 12 feet (3658 mm) above the maximum water level. [680.22(B)(1)]

E4203.4.2 Indoor locations. In indoor pool areas, the limitations of Section E4203.4.1 shall apply except where the luminaires, lighting outlets and ceiling-suspended paddle fans comply with all of the following conditions: [680.22(B)(2)]

1. The luminaires are of a totally enclosed type;
2. A ground-fault circuit interrupter is installed in the branch circuit supplying the luminaires or ceiling-suspended (paddle) fans; and
3. The distance from the bottom of the luminaire or ceiling-suspended (paddle) fan to the maximum water level is not less than 7 feet, 6 inches (2286 mm).

E4203.4.3 Existing lighting outlets and luminaires. Existing lighting outlets and luminaires that are located within 5 feet (1524 mm) horizontally from the inside walls of pools and outdoor spas and hot tubs shall be permitted to be located not less than 5 feet (1524 mm) vertically above the maximum water level, provided that such luminaires and outlets are rigidly attached to the existing structure and are protected by a ground-fault circuit-interrupter. [680.22(B)(3)]

E4203.4.4 Indoor spas and hot tubs. [680.43(B)]

1. Luminaires, lighting outlets, and ceiling-suspended paddle fans located over the spa or hot tub or within 5 feet (1524 mm) from the inside walls of the spa or hot tub shall be a minimum of 7 feet, 6 inches (2286 mm) above the maximum water level and shall be protected by a ground-fault circuit interrupter.

   Luminaires, lighting outlets, and ceiling-suspended paddle fans that are located 12 feet (3658 mm) or more above the maximum water level shall not require ground-fault circuit interrupter protection.

2. Luminaires protected by a ground-fault circuit interrupter and complying with Item 2.1 or 2.2 shall be permitted to be installed less than 7 feet, 6 inches (2286 mm) over a spa or hot tub.

   2.1. Recessed luminaires shall have a glass or plastic lens and nonmetallic or electrically isolated metal trim, and shall be suitable for use in damp locations.

   2.2. Surface mounted luminaires shall have a glass or plastic globe and a nonmetallic body or a metallic body isolated from contact. Such luminaires shall be suitable for use in damp locations.

E4203.4.5 GFCI protection in adjacent areas. Luminaires and outlets that are installed in the area extending between 5 feet (1524 mm) and 10 feet (3048 mm) from the inside walls of pools and outdoor spas and hot tubs shall be protected by ground-fault circuit-interrupters except where such fixtures and outlets are installed not less than 5 feet (1524 mm) above the maximum water level and are rigidly attached to the structure. 680.22(B)(4)]

E4203.5 Other outlets. Other outlets such as for remote control, signaling, fire alarm and communications shall be not less than 10 feet (3048 mm) from the inside walls of the pool. Measurements shall be determined in accordance with Section E4203.1. [680.22(D)]

E4203.6 Overhead conductor clearances. Except where installed with the clearances specified in Table E4203.5, the following parts of pools and outdoor spas and hot tubs shall not be placed under existing service-drop conductors or any other open overhead wiring; nor shall such wiring be installed above the following: [680.8]

1. Pools and the areas extending 10 feet (3048 mm) horizontally from the inside of the walls of the pool;
2. Diving structures; or
3. Observation stands, towers, and platforms.

Overhead conductors of network-powered broadband communications systems shall comply with the provisions in Table E4203.5 for conductors operating at 0 to 750 volts to ground.

Utility-owned, -operated and -maintained communications conductors, community antenna system coaxial cables and the supporting messengers shall be permitted at a height of not less than 10 feet (3048 mm) above swimming and wading pools, diving structures, and observation stands, towers, and platforms.

E4203.7 Underground wiring. Underground wiring shall not be installed under or within the area extending 5 feet (1524 mm) horizontally from the inside walls of pools and outdoor hot tubs and spas except where the wiring is installed to supply pool, spa or hot tub equipment or where space limitations prevent wiring from being routed 5 feet (1524 mm) or more horizontally from the inside walls, Where installed within 5 feet (1524 mm) of the inside walls, the wiring method shall be a complete raceway system of rigid metal conduit, intermediate metal conduit or a nonmetallic raceway system. Metal conduit shall be corrosion resistant and suitable for the location. The minimum cover depth shall be in accordance with Table E4203.7. [680.10]

TABLE E4203.5 [Table 680.8]
OVERHEAD CONDUCTOR CLEARANCES

	INSULATED SUPPLY OR SERVICE DROP CALBES, 0-750 VOLTS TO GROUND, SUPPORTED ON AN CABLED TOGETHER WITH AN EFFECTIVELY GROUNDED BARE MESSENGER OR EFFECTIVELY GROUNDED NEUTRAL CONDUCTOR (feet)	ALL OTHER SUPPLY OR SERVICE DROP CONDUCTORS (feet)	
		Voltage to ground	
		0-15 kV	Greater than 15 to 50 kV
A. Clearance in any direction to water level, edge of water surface, base of diving platform, or permanently-anchored raft	22.5	25	27
B. Clearance in any direction to the diving platform	14.5	17	18

For SI: 1 foot = 304.8 mm.

TABLE E4203.7 [Table 680.10]
MINIMUM BURIAL DEPTHS

WIRING METHOD	UNDERGROUND WIRING (inches)
Rigid metal conduit	6
Intermediate metal conduit	6
Nonmetallic raceways listed for direct burial and under concrete exterior slab not less than 4 inches in thickness and extending not less than 6 inches (162 mm) beyond the underground installation	6
Nonmetallic raceways listed for direct burial without concrete encasement	18

Other approved raceways[a]	18

For SI: 1 inch = 25.4 mm.

a. Raceways approved for burial only where concrete-encased shall require a concrete envelope not less than 2 inches in thickness.

SECTION E4204
BONDING

E4204.1 Performance. The equipotential bonding required by this section shall be installed to reduce voltage gradients in the pool area as prescribed. [680.26(A)]

E4204.2 Bonded parts. The parts of pools, spas, and hot tubs specified in Items 1 through 7 shall be bonded together using insulated, covered or bare solid copper conductors not smaller than 8 AWG or using rigid metal conduit of brass or other identified corrosion-resistant metal. An 8 AWG or larger solid copper bonding conductor provided to reduce voltage gradients in the pool, spa, or hot tub area shall not be required to be extended or attached to remote panelboards, service equipment, or electrodes. Connections shall be made by exothermic welding or by listed pressure connectors or clamps that are labeled as being suitable for the purpose and that are made of stainless steel, brass, copper or copper alloy, machine screw-type fasteners that engage not less than two threads or are secured with a nut, threaded-forming machine screws that engage not less than two-threads, or terminal bars. Connection devices or fittings that depend solely on solder shall not be used. Sheet metal screws shall not be used to connect bonding conductors or connection devices; [680.26(B); 680.26(E); 680.42(B); 680.43(D)(4)]

1. Conductive pool shells. Bonding to conductive pool shells shall be provided as specified in Item 1.1 or 1.2. Poured concrete, pneumatically applied or sprayed concrete, and concrete block with painted or plastered coatings shall be considered to be conductive materials because of their water permeability and porosity. Vinyl liners and fiberglass composite shells shall be considered to be nonconductive materials.

   1.1. Structural Reinforcing Steel. Unencapsulated structural reinforcing steel shall be bonded together by steel tie wires or the equivalent. Where structural reinforcing steel is encapsulated in a nonconductive compound, a copper conductor grid shall be installed in accordance with Item 1.2.

   1.2. Copper Conductor Grid, A copper conductor grid shall be provided and shall comply with Items 1.2.1 through 1.2.4:

      1.2.1. It shall be constructed of minimum 8 AWG bare solid copper conductors bonded to each other at all points of crossing.

      1.2.2. It shall conform to the contour of the pool and the pool deck.

      1.2.3. It shall be arranged in a 12 inch (305 mm) by 12 inch (305 mm) network of conductors in a uniformly spaced perpendicular grid pattern with a tolerance of 4 inches (102 mm).

      1.2.4. It shall be secured within or under the pool not more than 6 inches (152 mm) from the outer contour of the pool shell.

2. Perimeter surfaces. The perimeter surface shall extend for 3 feet (914 mm) horizontally beyond the inside walls of the pool and shall include unpaved surfaces, poured concrete surfaces and other types of paving. Perimeter surfaces that extend less than 3 feet (914 mm) beyond the inside wall of the pool and that are separated from the pool by a permanent wall or building 5 feet (1524 mm) or more in height shall require equipotential bonding on the pool side of the permanent wall or building. Bonding to perimeter surfaces shall be provided as specified in Item 2.1 or 2.2 and shall be attached to the pool, spa, or hot tub reinforcing steel or copper conductor grid at a minimum of four points uniformly spaced around the perimeter of the pool, spa, or hot tub. For nonconductive pool shells, bonding at four points shall not be required.

   Exception: The equipotential bonding requirements for perimeter surfaces shall not apply to a listed self-contained spa or hot tub located indoors and installed above a finished floor.

   2.1. Structural reinforcing steel. Structural reinforcing steel shall be bonded in accordance with Item 1.1.

   2.2. Alternate means. Where structural reinforcing steel is not available or is encapsulated in a nonconductive compound, a copper conductor(s) shall be used in accordance with Items 2.2.1 through 2.2.5:

      2.2.1. At least one minimum 8 AWG bare solid copper conductor shall be provided.

      2.2.2. The conductors shall follow the contour of the perimeter surface.

      2.2.3. Splices shall be listed.

      2.2.4. The required conductor shall be 18 to 24 inches (457 to 610 mm) from the inside walls of the pool.

      2.2.5. The required conductor shall be secured within or under the perimeter surface 4 to 6 inches (102 mm to 152 mm) below the subgrade.

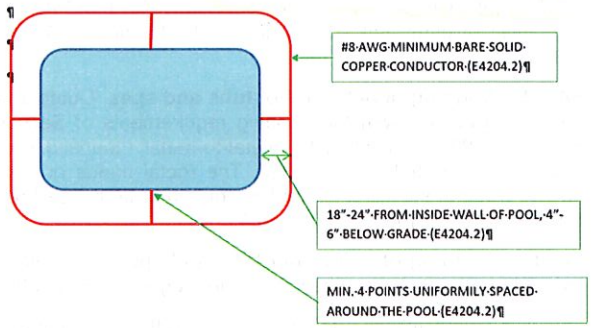

3. Metallic components. All metallic parts of the pool structure, including reinforcing metal not addressed in Item 1.1, shall be bonded. Where reinforcing steel is encapsulated with a nonconductive compound, the reinforcing steel shall not be required to be bonded.

4. Underwater lighting. All metal forming shells and mounting brackets of no-niche luminaires shall be bonded.

   Exception: Listed low-voltage lighting systems with nonmetallic forming shells shall not require bonding.

5. Metal fittings. All metal fittings within or attached to the pool structure shall be bonded. Isolated parts that are not over 4 inches (102 mm) in any dimension and do not penetrate into the pool structure more than 1 inch (25.4 mm) shall not require bonding.

6. Electrical equipment. Metal parts of electrical equipment associated with the pool water circulating system, including pump motors and metal parts of equipment associated with pool covers, including electric motors, shall be bonded.

   Exception: Metal parts of listed equipment incorporating an approved system of double insulation shall not be bonded.

   6.1. Double-Insulated Water Pump Motors. Where a double-insulated water pump motor is installed under the provisions of this item, a solid 8 AWG copper conductor of sufficient length to make a bonding connection to a replacement motor shall be extended from the bonding grid to an accessible point in the vicinity of the pool pump motor, Where there is no connection between the swimming pool bonding grid and the equipment grounding

system for the premises, this bonding conductor shall be connected to the equipment grounding conductor of the motor circuit.

6.2. Pool Water Heaters. For pool water heaters rated at more than 50 amperes and having specific instructions regarding bonding and grounding, only those parts designated to be bonded shall be bonded and only those parts designated to be grounded shall be grounded.

7. All fixed metal parts including, but not limited to, metal-sheathed cables and raceways, metal piping, metal awnings, metal fences and metal door and window frames.

Exceptions:

1. Those separated from the pool by a permanent barrier that prevents contact by a person shall not be required to be bonded.

2. Those greater than 5 feet (1524 mm) horizontally from the inside walls of the pool shall not be required to be bonded.

3. Those greater than 12 feet (3658 mm) measured vertically above the maximum water level of the pool, or as measured vertically above any observation stands, towers, or platforms, or any diving structures, shall not be required to be bonded.

E4204.3 Pool water. The pool water shall be intentionally bonded by means of a conductive surface area not less than 9 square inches (5806 mm^2) installed in contact with the pool water. This bond shall be permitted to consist of parts that are required to be bonded in Section E4204.2. [680.26(C)]

E4204.4 Bonding of outdoor hot tubs and spas. Outdoor hot tubs and spas shall comply with the bonding requirements of Sections E4204.1 through E4204.3. Bonding by metal-to-metal mounting on a common frame or base shall be permitted. The metal bands or hoops used to secure wooden staves shall not be required to be bonded as required in Section E4204.2. [680.42; 680.42(B)]

E4204.5 Bonding of indoor hot tubs and spas. The following parts of indoor hot tubs and spas shall be bonded together: [680.43(D)]

1. All metal fittings within or attached to the hot tub or spa structure.

2. Metal parts of electrical equipment associated with the hot tub or spa water circulating system, including pump motors unless part of a listed self-contained spa or hot tub.

3. Metal raceway and metal piping that are within 5 feet (1524 mm) of the inside walls of the hot tub or spa and that are not separated from the spa or hot tub by a permanent barrier.

4. All metal surfaces that are within 5 feet (1524 mm) of the inside walls of the hot tub or spa and that are not separated from the hot tub or spa area by a permanent barrier.

Exceptions:

1. Small conductive surfaces not likely to become energized, such as air and water jets and drain fittings, where not connected to metallic piping, towel bars, mirror frames, and similar nonelectrical equipment, shall not be required to be bonded.

2. Metal parts of electrical equipment associated with the water circulating system, including pump motors that are part of a listed self-contained hot tub or spa.

5. Electrical devices and controls that are not associated with the hot tubs or spas and that are located less than 5 feet (1524 mm) from such units.

E4204.5.1 Methods. All metal parts associated with the hot tub or spa shall be bonded by any of the following methods: [680.43(E)]

1. The interconnection of threaded metal piping and fittings.

2. Metal-to-metal mounting on a common frame or base

3. The provision of an insulated, covered or bare solid copper bonding jumper not smaller than 8 AWG. It shall not be the intent to require that the 8 AWG or larger solid copper bonding conductor be extended or attached to any remote panelboard, service equipment, or any electrode, but only that it shall be employed to eliminate voltage gradients in the hot tub or spa area as prescribed.

[CT Amd] E4204.5.2 Connections. Connections shall be made by exothermic welding or by listed pressure connections or clamps that are labeled as being suitable for the purpose and that are made of stainless steel, brass, copper or copper alloy. Connection devices or fittings that depend solely on solder shall not be used. Sheet metal screws shall not be used to connect bonding conductors or connection devices. Thread forming machine screws that engage not less than two threads are permitted. [680.26(B)]

SECTION E4205
GROUNDING

E4205.1 Equipment to be grounded. The following equipment shall be grounded: [680.6]

1. Through-wall lighting assemblies and underwater luminaires other than those low-voltage lighting products listed for the application without a grounding conductor.

2. All electrical equipment located within 5 feet (1524 mm) of the inside wall of the pool, spa or hot tub.

3. All electrical equipment associated with the recirculating system of the pool, spa or hot tub.

4. Junction boxes.

5. Transformer enclosures.

6. Ground-fault circuit-interrupters.

7. Panelboards that are not part of the service equipment and that supply any electrical equipment associated with the pool, spa or hot tub.

E4205.2 Luminaires and related equipment. Other than listed low-voltage luminaires not requiring grounding, all through-wall lighting assemblies, wet-niche, dry-niche, or no-niche luminaires shall be connected to an insulated copper equipment grounding conductor sized in accordance with Table E3908.12 but not smaller than 12 AWG. The equipment grounding conductor between the wiring chamber of the secondary winding of a transformer and a junction box shall be sized in accordance with the overcurrent device in such circuit. The junction box, transformer enclosure, or other enclosure in the supply circuit to a wet-niche or no-niche luminaire and the field-wiring chamber of a dry-niche luminaire shall be grounded to the equipment grounding terminal of the panelboard. The equipment grounding terminal shall be directly connected to the panelboard enclosure. The equipment grounding conductor shall be installed without joint or splice. [680.23(F)(A); 680.24(F)]

Exceptions:

1. Where more than one underwater luminaire is supplied by the same branch circuit, the equipment grounding conductor, installed between the junction boxes, transformer enclosures, or other enclosures in the supply circuit to wet-niche luminaires, or between the field-wiring compartments of dry-niche luminaires, shall be permitted to be terminated on grounding terminals.

2. Where an underwater luminaire is supplied from a transformer, ground-fault circuit-interrupter, clock-operated switch, or a manual snap switch that is located between the panelboard and a junction box connected to the conduit that extends directly to the underwater luminaire, the equipment grounding conductor shall be permitted to terminate on grounding terminals on the transformer, ground-fault circuit-interrupter, clock-operated switch enclosure, or an outlet box used to enclose a snap switch.

E4205.3 Nonmetallic conduit. Where a nonmetallic conduit is installed between a forming shell and a junction box, transformer enclosure, or other enclosure, a 8 AWG insulated copper bonding jumper shall be

installed in this conduit except where a listed low-voltage lighting system not requiring grounding is used. The bonding jumper shall be terminated in die forming shell, junction box or transformer enclosure, or ground-fault circuit-interrupter enclosure. The termination of the 8 AWG bonding jumper in the forming shell shall be covered with, or encapsulated in, a listed potting compound to protect such connection from the possible deteriorating effect of pool water. [680.23(B)(2)(b)]

E4205.4 Flexible cords. Other than listed low-voltage lighting systems not requiring grounding, wet-niche luminaires that are supplied by a flexible cord or cable shall have all exposed noncurrent-carrying metal parts grounded by an insulated copper equipment grounding conductor that is an integral part of the cord or cable. This grounding conductor shall be connected to a grounding terminal in the supply junction box, transformer enclosure, or other enclosure. The grounding conductor shall not be smaller than the supply conductors and not smaller than 16 AWG. [680.23(B)(3)]

E4205.5 Motors. Pool-associated motors shall be connected to an insulated copper equipment grounding conductor sized in accordance with Table E3908.12, but not smaller than 12 AWG. Where the branch circuit supplying the motor is installed in the interior of a one-family dwelling or in the interior of accessory buildings associated with a one-family dwelling, using a cable wiring method permitted by Table E4202.1, an uninsulated equipment grounding conductor shall be permitted provided that it is enclosed within the outer sheath of the cable assembly. [680.21(A)(1) and (4)]

E4205.6 Feeders. An equipment grounding conductor shall be installed with the feeder conductors between the grounding terminal of the pool equipment panelboard and the grounding terminal of the applicable service equipment or source of a separately derived system. The equipment grounding conductor shall be insulated, shall be sized in accordance with Table E3908.12, and shall be not smaller than 12 AWG. [680.25(B) and (B)(1)]

Exception: An existing feeder between an existing remote panelboard and service equipment shall be permitted to run in flexible metal conduit or an approved cable assembly that includes an equipment grounding conductor within its outer sheath. The equipment grounding conductor shall not be connected to the grounded conductor in the remote panelboard.

E4205.6.1 Separate buildings. A feeder to a separate building or structure shall be permitted to supply swimming pool equipment branch circuits, or feeders supplying swimming pool equipment branch circuits, provided that the grounding arrangements in the separate building meet the requirements of Section E3607.3. Where installed in other than existing feeders covered in the exception to Section E4205.6, a separate equipment grounding conductor shall be an insulated conductor. [680.25(B)(2)]

E4205.7 Cord-connected equipment. Where fixed or stationary equipment is connected with a flexible cord to facilitate removal or disconnection for maintenance, repair, or storage, as provided in Section E4202.2, the equipment grounding conductors shall be connected to a fixed metal part of the assembly. The removable part shall be mounted on or bonded to the fixed metal part. [680.7]

E4205.8 Other equipment. Other electrical equipment shall be grounded in accordance with Section E3908. [Article 250, Parts V, VI, VII; 680.6]

SECTION E4206
EQUIPMENT INSTALLATION

E4206.1 Transformers and power supplies. Transformers and power supplies used for the supply of underwater luminaires, together with the transformer or power supply enclosure, shall be listed for swimming pool and spa use. The transformer or power supply shall incorporate either a transformer of the isolated-winding type with an ungrounded secondary that has a grounded metal barrier between the primary and secondary windings, or a transformer that incorporates an approved system of double insulation between the primary and secondary windings. [680.23(A)(2)]

E4206.2 Ground-fault circuit-interrupters. Ground-fault circuit-interrupters shall be self-contained units, circuit breaker types, receptacle types or other approved types. [680.5]

E4206.3 Wiring on load side of ground-fault circuit-interrupters and transformers. For other than grounding conductors, conductors installed on the load side of a ground-fault circuit-interrupter or transformer used to comply with the provisions of Section E4206.4 shall not occupy raceways, boxes, or enclosures containing other conductors except where the other conductors are protected by ground-fault circuit interrupters or are grounding conductors. Supply conductors to a feed-through type ground-fault circuit interrupter shall be permitted in the same enclosure. Ground-fault circuit interrupters shall be permitted in a panelboard that contains circuits protected by other than ground-fault circuit interrupters. [680.23(F)(3)]

E4206.4 Underwater luminaires. The design of an underwater luminaire supplied from a branch circuit either directly or by way of a transformer or power supply meeting the requirements of Section E4206.1, shall be such that, where the fixture is properly installed without a ground-fault circuit-interrupter, there is no shock hazard with any likely combination of fault conditions during normal use (not relamping). In addition, a ground-fault circuit-interrupter shall be installed in the branch circuit supplying luminaires operating at more than low-voltage contact limit, such that there is no shock hazard during relamping. The installation of the ground-fault circuit-interrupter shall be such that there is no shock hazard with any likely fault-condition combination that involves a person in a conductive path from any ungrounded part of the branch circuit or the luminaire to ground. Compliance with this requirement shall be obtained by the use of a listed underwater luminaire and by installation of a listed ground-fault circuit-interrupter in the branch circuit or a listed transformer or power supply for luminaires operating at more than the low-voltage contact limit. Luminaires that depend on submersion for safe operation shall be inherently protected against the hazards of overheating when not submerged. [680.23(A)(1), (3) and (7)]

E4206.4.1 Maximum voltage. Luminaires shall not be installed for operation on supply circuits over 150 volts between conductors. [680.23(A)(4)

E4206.4.2 Luminaire location. Luminaires mounted in walls shall be installed with the top of the fixture lens not less than 18 inches (457 mm) below the normal water level of the pool, except where the luminaire is listed and identified for use at a depth of not less than 4 inches (102 mm) below the normal water level of the pool. A luminaire facing upward shall have the lens adequately guarded to prevent contact by any person or shall be listed for use without a guard. [680.23(A)(5) and (6)]

E4206.5 Wet-niche luminaires. Forming shells shall be installed for the mounting of all wet-niche underwater luminaires and shall be equipped with provisions for conduit entries. Conduit shall extend from the forming shell to a suitable junction box or other enclosure located as provided in Section E4206.9, Metal parts of the luminaire and forming shell in contact with the pool water shall be of brass or other approved corrosion-resistant metal. [680.23(B)(1), (2), (4) and (5)]

The end of flexible-cord jackets and flexible-cord conductor terminations within a luminaire shall be covered with, or encapsulated in, a suitable potting compound to prevent the entry of water into the luminaire through the cord or its conductors. In present, the grounding connection within a luminaire shall be similarly treated to protect such connection from the deteriorating effect of pool water in the event of water entry into the luminaire.

Luminaires shall be bonded to and secured to the forming shell by a positive locking device that ensures a low-resistance contact and requires a tool to remove the luminaire from the forming shell.

E4206.5.1 Servicing. All wet-niche luminaires shall be removable from the water for inspection, relamping, or other maintenance. The forming shell location and length of cord in the forming shell shall permit personnel to place the removed luminaire on the deck or other dry location for such maintenance. The luminaire maintenance location shall be accessible without entering or going into the pool water. [680.23(B)(6)]

E4206.6 Dry-niche luminaires. Dry-niche luminaires shall be provided with provisions for drainage of water. Other than listed low-voltage luminaires not requiring grounding, a dry-niche luminaire shall have means for accommodating one equipment grounding conductor for each conduit entry. Junction boxes shall not be required but, if used, shall not be

required to be elevated or located as specified in Section E4206.9 if the luminaire is specifically identified for the purpose. [680.23©(1) and (2)]

E4206.7 No-niche luminaires. No-niche luminaires shall be listed for the purpose and shall be installed in accordance with the requirements of Section E42065. Where connection to a forming shell is specified, the connection shall be to the mounting bracket. [680.23(D)]

E4206.8 Through-wall lighting assembly. A through-wall lighting assembly shall be equipped with a threaded entry or hub, or a nonmetallic hub, for the purpose of accommodating the termination of the supply conduit. A through-wall lighting assembly shall meet the construction requirements of Section E4205.4 and be installed in accordance with the requirements of Section E4206.5. Where connection to a forming shell is specified, the connection shall be to the conduit termination point. 680.23(E)]

E4206.9 Junction boxes and enclosures for transformers or ground-fault circuit interrupters. Junction boxes for underwater luminaires and enclosures for transformers and ground-fault circuit-interrupters that supply underwater luminaires shall comply with the following: [680.24(A) through (E)]

E4206.9.1 Junction boxes. A junction box connected to a conduit that extends directly to a forming shell or mounting bracket of a no-niche luminaire shall be: [680.24(A)(1) and (2)]

1. Listed as a swimming pool junction box;

2. Equipped with threaded entries or hubs or a nonmetallic hub;

3. Constructed of copper, brass, suitable plastic, or other approved corrosion-resistant material;

4. Provided with electrical continuity between every connected metal conduit and the grounding terminals by means of copper, brass, or other approved corrosion-resistant metal that is integral with the box; and

5. Located not less than 4 inches (102 mm), measured from the inside of the bottom of the box, above the ground level, or pool deck, or not less than 8 inches (203 mm) above the maximum pool water level, whichever provides the greatest elevation, and shall be located not less than 4 feet (1219 mm) from the inside wall of the pool, unless separated from the pool by a solid fence, wall or other permanent barrier. Where used on a lighting system operating at low-voltage contact limit or less, a flush deck box shall be permitted provided that an approved potting compound is used to fill the box to prevent the entrance of moisture; and the flush deck box is located not less than 4 feet (1219 mm) from the inside wall of the pool.

E4206.9.2 Other enclosures. An enclosure for a transformer, ground-fault circuit-interrupter or a similar device connected to a conduit that extends directly to a forming shell or mounting bracket of a no-niche luminaire shall be: [680.24(B)(1) and (2)]

1. Listed and labeled for the purpose, comprised of copper, brass, suitable plastic, or other approved corrosion-resistant material;

2. Equipped with threaded entries or hubs or a nonmetallic hub;

3. Provided with an approved seal, such as duct seal at the conduit connection, that prevents circulation of air between the conduit and the enclosures;

4. Provided with electrical continuity between every connected metal conduit and the grounding terminals by means of copper, brass or other approved corrosion-resistant metal that is integral with the enclosures; and

5. Located not less than 4 inches (102 mm) measured from the inside bottom of the enclosure, above the ground level or pool deck, or not less than 8 inches (203 mm) above the maximum pool water level, whichever provides the greater elevation, and shall be located not less than 4 feet (1219 mm) from the inside wall of the pool, except where separated from the pool by a solid fence, wall or other permanent barrier.

E4206.9.3 Protection of junction boxes and enclosures. Junction boxes and enclosures mounted above the grade of the finished walkway around the pool shall not be located in the walkway unless afforded additional protection, such as by location under diving boards or adjacent to fixed structures. [680.24(C)]

E4206.9.4 Grounding terminals. Junction boxes, transformer and power supply enclosures, and ground-fault circuit-interrupter enclosures connected to a conduit that extends directly to forming shell or mounting bracket of a no-niche luminaire shall be provided with grounding terminals in a quantity not less than the number of conduit entries plus one. [680.24(D)]

E4206.9.5 Strain relief. The termination of a flexible cord of an underwater luminaire within a junction box, transformer or power supply enclosure, ground-fault circuit-interrupter, or other enclosure shall be provided with a strain relief. [680.24(E)]

E4206.10 Underwater audio equipment. Underwater audio equipment shall be identified for the purpose. [680.27(A)]

E4206.10.1 Speakers. Each speaker shall be mounted in an approved metal forming shell, the front of which is enclosed by a captive metal screen, or equivalent, that is bonded to and secured to the forming shell by a positive locking device that ensures a low-resistance contact and requires a tool to open for installation or servicing of the speaker. The forming shell shall be installed in a recess in the wall or floor of the pool. [680.27(A)(1)]

E4206.10.2 Wiring methods. Rigid metal conduit of brass or other identified corrosion-resistant metal, rigid polyvinyl chloride conduit, rigid thermosetting resin conduit or liquid tight flexible nonmetallic conduit (LFNC-B) shall extend from the forming shell to a suitable junction box or other enclosure as provided in Section E4206.9. Where rigid nonmetallic conduit or liquid tight flexible nonmetallic conduit is used, an 8 AWG solid or stranded insulated copper bonding jumper shall be installed in this conduit with provisions for terminating in the forming shell and the junction box. The termination of the 8 AWG bonding jumper in the forming shell shall be covered with, or encapsulated in, a suitable potting compound to protect such connection from the possible deteriorating effect of pool water. [680.27(A)(2)]

E4206.10.3 Forming shell and metal screen. The forming shell and metal screen shall be of brass or other approved corrosion-resistant metal. All forming shells shall include provisions for terminating an 8 AWG copper conductor. [680.27(A)(3)]

E4206.11 Electrically operated pool covers. The electric motors, controllers, and wiring for pool covers shall be located not less than 5 feet (1524 mm) from the inside wall of the pool except where separated from the pool by a wall, cover, or other permanent barrier. Electric motors installed below grade level shall be of the totally enclosed type. The electric motor and controller shall be connected to a circuit protected by a ground-fault circuit-interrupter. The device that controls the operation of the motor for an electrically operated pool cover shall be located so that the operator has full view of the pool. 680.27(B)(1) and (2)]

E4206.12 Electric pool water heaters. All electric pool water heaters shall have the heating elements subdivided into loads not exceeding 48 amperes and protected at not more than 60 amperes. The ampacity of the branch-circuit conductors and the rating or setting of overcurrent protective devices shall be not less than 125 percent of the total nameplate load rating. [680.9]

E4206.13 Pool area heating. The provisions of Sections E4206.13.1 through 134206.13.3 shall apply to all pool deck areas, including a covered pool, where electrically operated comfort heating units are installed within 20 feet (6096 mm] of the inside wall of the pool. [680.27(C)]

E4206.13.1 Unit heaters. Unit heaters shall be rigidly mounted to the structure and shall be of the totally enclosed or guarded types. Unit heaters shall not be mounted over the pool or within the area extending 5 feet (1524 mm) horizontally from the inside walls of a pool. [680.27(C)(1)]

E4206.13.2 Permanently wired radiant heaters. Electric radiant heaters shall be suitably guarded and securely fastened to their mounting devices. Heaters shall not be installed over a pool or within

the area extending 5 feet (1524 mm) horizontally from the inside walls of the pool and shall be mounted not less than 12 feet (3658 mm) vertically above the pool deck. [680.27(C)(2)]

E4206.13.3 Radiant heating cables prohibited. Radiant heating cables embedded in or below the deck shall be prohibited. 680.27(C)(3)]

SECTION E4207
STORABLE SWIMMING POOLS

E4207.1 Pumps. A cord and plug-connected pool filter pump for use with storable pools shall incorporate an approved system of double insulation or its equivalent and shall be provided with means for grounding only the internal and nonaccessible noncurrent-carrying metal parts of the appliance. [680.31]

The means for grounding shall be an equipment grounding conductor run with the power-supply conductors in a flexible cord that is properly terminated in a grounding-type attachment plug having a fixed grounding contact. Cord and plug-connected pool filter pumps shall be provided with a ground-fault circuit interrupter that is an integral part of the attachment plug or located in the power supply cord within 12 inches (305 mm) of the attachment plug.

E4207.2 Ground-fault circuit-interrupters required. Electrical equipment, including power-supply cords, used with storable pools shall be protected by ground-fault circuit-interrupters. All 125-volt, 15- and 20-ampere receptacles located within 20 feet (6096 mm) of the inside walls of a storable pool shall be protected by a ground-fault circuit interrupter. In determining these dimensions, the distance to be measured shall be the shortest path that the supply cord of an appliance connected to the receptacle would follow without passing through a floor, wall, ceiling, doorway with hinged or sliding door, window opening, or other effective permanent barrier. [680.32]

E4207.3 Luminaires. Luminaires for storable pools shall not have exposed metal parts and shall be listed for the purpose as an assembly. In addition, luminaires for storable pools shall comply with the requirements of Section E4207.3.1 or E4207.3.2. [680.33]

E4207.3.1 Within the low-voltage contact limit. A luminaire installed in or on the wall of a storable pool shall be part of a cord and plug-connected lighting assembly. The assembly shall: [68033(A)]

1. Have a luminaire lamp that is suitable for the use at the supplied voltage;
2. Have an impact-resistant polymeric lens, luminaire body, and transformer enclosure;
3. Have a transformer meeting the requirements of section E4206.1 with a primary rating not over 150 volts; and
4. Have no exposed metal parts.

E4207.3.2 Over the low-voltage limit but not over 150 volts. A lighting assembly without a transformer or power supply, and with the luminaire lamps operating at not over 150 volts, shall be permitted to be cord and plug-connected where the assembly is listed as an assembly for the purpose and complies with all of the following: [680.33(B)]

1. It has an impact-resistant polymeric lens and luminaire body.
2. A ground-fault circuit interrupter with open neutral conductor protection is provided as an integral part of the assembly.
3. The luminaire lamp is permanently connected to the ground-fault circuit interrupter with open-neutral protection.
4. It complies with the requirements of Section E4206.4.
5. It has no exposed metal parts.

E4207.4 Receptacle locations. Receptacles shall be located not less than 6 feet (1829 mm) from the inside walls of a pool. In determining these dimensions, the distance to be measured shall be the shortest path that the supply cord of an appliance connected to the receptacle would follow without passing through a floor, wall, ceiling, doorway with hinged or sliding door, window opening, or other effective permanent barrier. [680.34]

SECTION E4208
SPAS AND HOT TUBS

E4208.1 Ground-fault circuit-interrupters. The outlet(s) that supplies a self-contained spa or hot tub, or a packaged spa or hot tub equipment assembly, or a field-assembled spa or hot tub with a heater load of 50 amperes or less, shall be protected by a ground-fault circuit-interrupter. [680.44(A) and (B)]

A listed self-contained unit or listed packaged equipment assembly marked to indicate that integral ground-fault circuit-interrupter protection is provided for all electrical parts within the unit or assembly, including pumps, air blowers, heaters, lights, controls, sanitizer generators and wiring, shall not require that the outlet supply be protected by a ground-fault circuit interrupter,

E4208.2 Electric water heaters. Electric spa and hot tub water heaters shall be listed and shall have the heating elements subdivided into loads not exceeding 48 amperes and protected at not more than 60 amperes. The ampacity of the branch-circuit conductors, and the rating or setting of overcurrent protective devices, shall be not less than 125 percent of the total nameplate load rating. [680.9]

E4208.3 Underwater audio equipment. Underwater audio equipment used with spas and hot tubs shall comply with the provisions of Section E4206.10. [680.43(G)]

E4208.4 Emergency switch for spas and hot tubs. A clearly labeled emergency shutoff or control switch for the purpose of stopping the motor(s) that provides power to the recirculation system and jet system shall be installed at a point that is readily accessible to the users, adjacent to and within sight of the spa or hot tub and not less than 5 feet (1524 mm) away from the spa or hot tub. This requirement shall not apply to single-family dwellings. [680.41]

OUTDOOR SWIMMING POOL FIELD INSPECTION CHECKLIST

TEMPORARY ENCLOSURE (CT AMD AG105.6)

___ Installed prior to the electrical bonding inspection

___ Minimum 4 feet in height

___ No openings that allow passage of a 4 inch sphere

___ Equipped with a positive latching device on any openings

BARRIERS

___ Top of barrier min. 48" above grade (AG105.2)

___ Maximum vertical distance from grade to bottom of barrier shall be 2 inches (AG105.2)

___ Barrier mounted on top of pool shall be 4 inches (AG105.2)

___ Openings in barrier shall not allow passage of 4 inch sphere (AG105.2)

___ Solid barriers shall not have indentations or protrusions, except normal construction tolerances (AG105.2)

___ Distance between the tops of horizontal members is less than 45 inches and located on the pool side, the spacing between the vertical members shall not exceed 1 ¾ inches. (AG105.2)

___ Decorative cutouts within vertical members shall not exceed 1 ¾ inches in width (AG105.2)

___ Distance between the tops of horizontal members is 45 inches or more, spacing between vertical members shall not exceed 4 inches (AG105.2)

___ Chain link fence mesh size shall be max. 2 ¼ inch square or vertical slats fastened in place which reduce the opening to not more than 1 ¾ inches (AG105.2)

___ Maximum opening formed by diagonal members shall not be more than 1 ¾ inches (AG105.2)

___ Barriers shall be located to prohibit structures, equipment and objects from being used to climb (AG105.4)

GATES

___ Access gates shall be equipped to accommodate a locking device (AG105.2)

___ Pedestrian access gates shall open outward from the pool, self-closing and self-latching (AG105.2)

___ Gates other than pedestrian shall have a self-latching device (AG105.2)

___ Release mechanism less than 54 inches above grade shall be located on the pool side at least 3 inches down and shall have no opening larger than ½ inch within 18 inches of the release mechanism (AG105.2)

WALL OF A DWELLING SERVES AS PART OF BARRIER, one of the following

___ Pool safety cover in compliance with ASTM F1346; or

___ Door equipped with an alarm with an audible alarm when the door and its screen is opened, listed and labeled per UL 2017 and the deactivation device located at least 54 inches above the threshold of the door (AG105.2)

___ Doors shall be self-closing with self-latching devices (AG105.2)

POOL ALARM (CT AMD AG105.7)

___ Emits a sound of at least 50 decibels

___ Alarm sounds when 15 pounds or more enters the water

HEATED POOLS

___ Heaters equipped with a readily accessible on-off switch that is mounted outside of the heater (N1103.9.1)

___ Gas-fired heaters shall not be equipped with constant burning pilot lights (N1103.9.1)

___ Pool provided with a vapor-retardant cover, except pools deriving 70% of energy from site-recovered energy (N1103.9.3)

___ Automatically turn off and on heaters according to a preset schedule (N1103.9.2)

___ Pool heaters rated > 50 amperes and having specific instructions regarding bonding and grounding, only those parts shall be bonded and grounded (E4204.2)

TIME SWITCHES

___ Automatically turn off and on pumps according to a preset schedule (N1103.9.2)

WIRING METHODS

___ Flexible cord shall not exceed 3 feet in length (E4202.2)

___ Cords supplying pool equipment shall not be smaller than 12 AWG and shall terminate in a grounding-type attachment plug (E4202.2)

EQUIPMENT LOCATION AND CLEARANCES

___ Receptacles for water-pump motors shall be located between 6 feet and 10 feet from the inside wall of the pool and shall be single and of the locking and grounding type (E4203.1.1)

___ Receptacles for water-pump motors shall be GFCI protected (E4203.1.1)

___ No receptacles shall be located less than 6 feet from the inside wall of the pool (E4203.1.1)

___ General purpose receptacle shall be located a minimum 6 feet and not more than 20 feet from the inside wall of the pool (E4203.1.2)

___ General purpose receptacle shall be 125-volt, 15- or 20-ampere rated (E4203.1.2)

___ General purpose receptacle shall be located not more than 6 feet, 6 inches above the floor, platform or grade level serving the pool (E4203.1.2)

___ All 15- and 20-ampere, single phase, 125-volt receptacles within 20 feet of the inside walls of pools shall be GFCI protected (E4203.1.3)

___ Switching devices shall be located not less than 5 feet horizontally from the inside wall of the pool, unless the switch is listed for use within 5 feet (E4203.2)

___ One or more means to simultaneously disconnect all ungrounded conductors for all utilization equipment, other than lighting (E4203.3)

___ Disconnecting means shall be readily accessible and within sight from the equipment served and at least 5 feet horizontally from the inside wall of the pool (E4203.3)

___ Lighting outlets, luminaires, ceiling paddle fans shall not be installed over the pool or the area extending 5 feet horizontally from the inside walls of a pool and not less than 12 feet above the maximum water level (E4203.4.1)

___ Other outlets such as remote control, signaling, fire alarm and communications shall be not less than 10 feet from the inside walls of the pool (E4203.5)

OVERHEAD CONDUCTOR CLEARANCES

___ 0-750 volts; in any direction to water level, edge of water surface (E4203.6)

___ Area extends 10 feet horizontally from the inside walls of the pool (E4203.6)

___ Utility owned, operated and maintained communications conductors shall be permitted at a height of not less than 10 feet above pools and diving structures (E4203.6)

UNDERGROUND WIRING

___ Not be installed within the area extending 5 feet horizontally from the inside walls of pool, except where wiring is installed to supply pool equipment or space limitations (E4203.7)

___ Wiring installed within 5 feet of the inside walls, shall be in a raceway system of RMC, IMC or NMC (E4203.7)

___ Metal conduit shall be corrosion resistant and shall be suitable for the location (E4203.7)

___ RMC and IMC shall have 6 inch minimum burial depth (Table E4203.7)

___ NMC with 4 inch minimum concrete cover shall have 6 inch minimum burial depth (Table E4203.7)

___ NMC shall have a minimum burial depth of 18 inches (Table E4203.7)

DRY-NICHE LUMINAIRES

___ Minimum 12 AWG insulated copper equipment grounding conductor (E4205.2)

___ Equipment grounding conductor shall be installed without joint or splice (E4205.2)

NO-NICHE LUMINAIRES

___ Metal forming shells and mounting brackets shall be bonded (E4204.2)

___ Minimum 12 AWG insulated copper equipment grounding conductor (E4205.2)

___ Equipment grounding conductor shall be installed without joint or splice (E4205.2)

WET-NICH LUMINAIRES

___ Flexible cord or cable shall have all exposed noncurrent-carrying metal parts grounded by an insulated copper equipment grounding conductor that is integral with the cord or cable. (E4202.2)

___ Grounding conductor shall be connected to a grounding terminal in the supply junction box, transformer, or other enclosure (E4202.2)

___ Grounding conductor shall not be smaller than supply conductors and not smaller than 16 AWG (E4202.2)

___ Minimum 12 AWG insulated copper equipment grounding conductor (E4205.2)

___ Equipment grounding conductor shall be installed without joint or splice (E4205.2)

EQUIPMENT INSTALLATION

___ Double-insulated water pump motors; solid 8 AWG copper conductor shall be provided for bonding of a replacement motor (E4204.2)

___

BONDING

___ Not smaller than 8 AWG using insulated, covered or bare solid copper conductors or RMC of brass or other identified metal (E4204.2)

___ Shall not be required to be extended or attached to remote panelboards, service equipment, or electrodes (E4204.2)

___ Connections shall be made by exothermic welding, listed and labeled pressure connectors, machine type screw fasteners, threaded-forming machine screws, or terminal bars (E4204.2)

___ Metallic parts of the pool structure, including reinforcing metal, shall be bonded (E4204.2)

___ Encapsulated rebar shall not be required to be bonded (E4204.2)

___ Metal fittings within or attached to the pool structures shall be bonded (E4204.2)

___ Isolated parts not over 4 inches in any direction and do not penetrate into the pool structure more than 1 inch shall not require bonding (E4204.2)

___ Metal parts of electrical equipment associated with pool water circulating system shall be bonded (E4204.2)

___ All fixed metal parts within 5 ft horizontally and less than 12 ft vertically above the maximum pool water level shall be bonded (E4204.2)

___ Pool water shall be intentionally boned by a conductive surface area not less than 9 square inches installed in contact with the water (E4204.3)

Conductive Pool shells (E4204.2)

___ Unencapsulated rebar shall be bonded together by steel wire tires or equivalent

___ Encapsulated rebar: Copper conductor grid, min. 8 AWG bare solid copper conductor, bonded to each other at all points of crossing; follow contour of the pool and deck; 12"x12" uniformly spaced grid pattern with a tolerance of 4"; secured within or under the pool not more than 6" from the outer contour of the pool shell

___ Perimeter surfaces shall extend 3 ft horizontally beyond the inside walls of the pool and shall include unpaved surfaces, poured concrete surfaces and other types of paving (E4204.2)

___ Perimeter surfaces extending < 3 ft separated from the pool by a minimum 5 ft high barrier shall require equipotential bonding on the pool side (E4204.2)

___ Bond perimeter surfaces at a minimum 4 points uniformly spaced around the perimeter of the pool (E4204.2)

Nonconductive Pool shells (E4204.2)

___ Bonding at 4 points not required (E4204.2)

___ Minimum 8 AWG bare solid copper conductor (E4204.2)

___ Follow contour of the perimeter surface (E4204.2)

___ Splices listed (E4204.2)

___ Conductor shall be 18 – 24 inches from the inside walls of the pool (E4204.2)

___ Shall be secured within or under the perimeter surface 4 to 6 inches below the subgrade (E4204.2)

GROUNDING

___ Through-wall lighting and underwater luminaires other than those low-voltage listed lighting products shall be grounded (E4205.1)

___ Electrical equipment within 5 ft of the inside wall of the pool shall be grounded (E4205.1)

___ Electrical equipment associated with the recirculating system shall be grounded (E4205.1)

___ Junction boxes, transformer enclosures, GFCI's and panelboards that are not part of the service equipment and that supply any electrical equipment associated with the pool shall be grounded (E4205.1)

___ NMC installed between forming shell, j-box, transformer enclosure, or other enclosure shall be installed with a 8 AWG insulated copper bonding jumper in the conduit, except for listed low-voltage lighting systems (E4205.3)

___ Bonding jumper shall be terminated